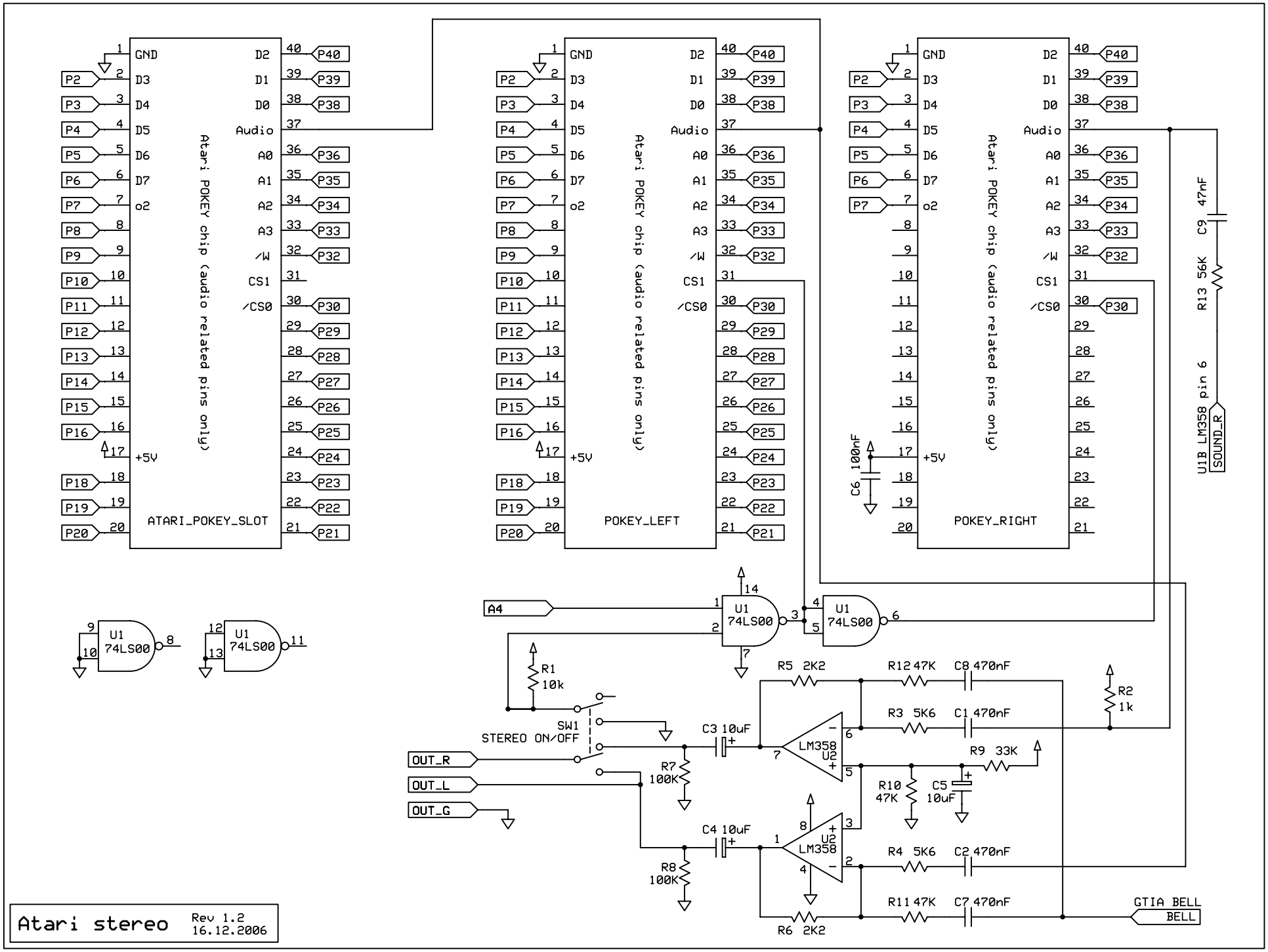
ATARI_POKEY_SLOT
POKEY_LEFT
POKEY_RIGHT
Atari POKEY chip (audio related pins only)
GND
D2
D1
D0
Audio
A0
A1
A2
A3
/W
CS1
/CS0
D3
D4
D5
D6
D7
o2
+5V
U1
74LS00
LM358
U2
A4
R1
10k
SW1
STEREO ON/OFF
OUT_R
OUT_L
OUT_G
R7
100K
R8
100K
C3 10uF
C4 10uF
R5 2K2
R6 2K2
R12 47K
R3 5K6
R4 5K6
R11 47K
C8 470nF
C1 470nF
C2 470nF
C7 470nF
R9 33K
R10
47K
C5
10uF
R2
1k
C6 100nF
C9 47nF
R13 56K
U1B LM358 pin 6
SOUND_R
GTIA BELL
BELL
Atari stereo
Rev 1.2
16.12.2006